Non-contact
High Voltage Detector

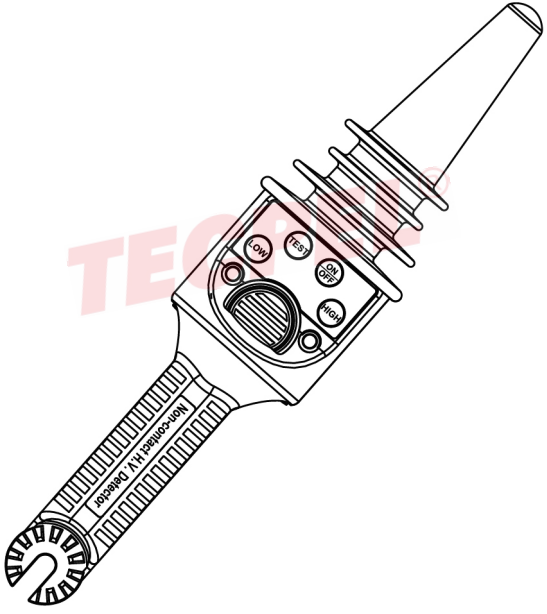

INSTRUCTION MANUAL

https://www.tecpel.com

Index

	Page
1. Introduction	1
2. Safety precaution	2
3. Applications	3
4. Features & specifications	3-4
5. Instrument layout	5
6. Operation	6-9
7. Maintenance	10

TECPEL®

1. Introduction

NOTE

This detector has been designed and tested according to CE Safety Requirements for Electronic Measuring Apparatus. Follow all warnings to ensure safe operation.

⚠ WARNING

READ "SAFETY PRECAUTION" (NEXT PAGE) BEFORE USING THE HIGH VOLTAGE DETECTOR.

TECPEL®

https://www.tecpel.com

2. Safety precaution

Electricity can cause severe injuries with high voltages. Therefore it is very important to read the following info before using the Non-contact High Voltage Detector.

This must only be used and operated by a competent trained person and in strict accordance with the instructions. We will not accept liability for any damage or injury caused by misuse or non compliance with instructions and safety procedures.

Examine the Non-contact High Voltage Detector to make sure it is clean and dry. If it is not, wipe with a clean, dry, lint-free cloth.

The high voltage detector test should always be used as an indication only.

Read all safety information carefully before attempting to operate or service the High Voltage Detector.

Use the High Voltage Detector only as specified in this manual. Otherwise, the protection provided by the High Voltage Detector may be impaired.

Please keep in your mind to wear high insulated gloves when you test high voltages between 600V~1.5kV.

Please keep in your mind to wear high insulated gloves and to use the hot stick when you test high voltages between 1.5kV~132kV.

TECPEL®

https://www.tecpel.com

3. Applications

- Non-contact detection of live voltages
- Find faults in cables
- Check and detect live high voltage cables
- Trace live wires
- Check high frequency radiation
- Check grounding equipment
- Detect residual or induced voltages

4. Features & specifications

- Power ON/OFF function
- Circuit Test function
  Press the Test button to make sure the whole circuit is working well before testing actual high voltage circuits.
- 2 ranges for selection (2 function buttons)
  Low : 50V~1.5kV
  Press the LOW button, the detector is ready for low voltage detection.
  HIGH :1.5kV~132kV
  Press the HIGH button, the detector is ready for high voltage detection.
- Power consumption :
  OFF : Less than 5μA
  Low voltage detection mode: Less than 40mA
  High voltage detection mode : Less than 40mA
- Duty cycle : Continuous
- Response Time : Instantaneous

https://www.tecpel.com

- Operating temperature : 0~50°C
- Power source : **Alkaline battery** 9V x 1
- Dimensions : 318(L) x 75(W) x 71(D) mm
- Weight : Approx. 227g (Battery included)
- Accessories : Instruction manual
  Carry case
  Battery

TECPEL®

5. Instrument layout

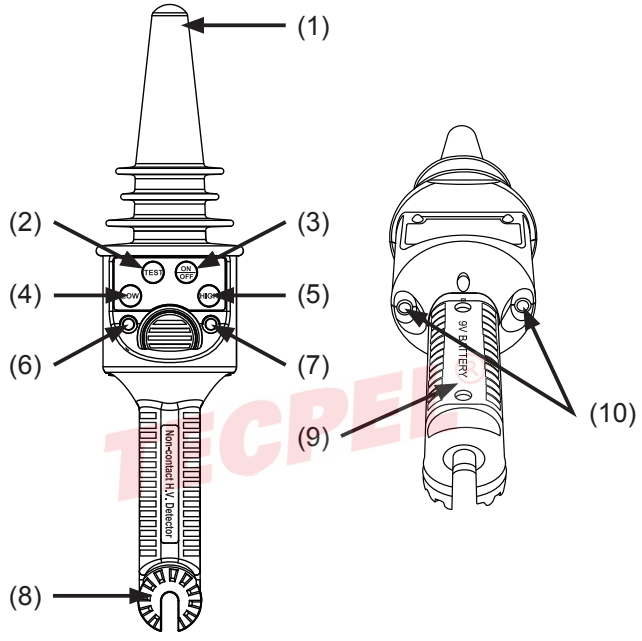

(1) Voltage sensor
(2) TEST button
(3) ON/OFF button
(4) LOW range button
(5) HIGH range button
(6) LOW range LED
(7) HIGH range LED
(8) The connection point of Hot Stick
(9) Battery cover
(10) Blue LEDs for detection

https://www.tecpel.com

6. Operation

- **ON/OFF button**
  When users turn on the detector, the 2 blue LEDs will Flash and the buzzer will generate a sound intermittently. The red LED of the HIGH range will be turned on. The original mode is the HIGH range.

- **TEST button**
  Press the TEST button to do the self-test first, this is to make sure the circuits inside the detector is ok. When you press the TEST button, the 2 blue LEDs will glow and the buzzer will generate a sound continuously. The red LED of the HIGH range will be still on (the original mode). **If the 2 blue LEDs do not glow and the continuous sound doesn't be generated, please replace with a new battery.**

- **LOW range button(Low voltage detection)**
  Press the ON/OFF button to turn on the high voltage detector.
  Press the LOW range button, the 2 blue LEDs will flash and the buzzer will generate a sound intermittently. The red LED of the LOW range will be turned on.
  The LOW range for low voltage detection : 50V~1.5kV.Place the probe sensing tip of the high voltage detector near a low voltage line (50V~1.5kV), but not touching the line.
  The blue LEDs will flash very fast and the frequency of the sound will be at the same rate if a voltage is present.

https://www.tecpel.com

When the probe sensing tip makes contact or is very close to the voltage line, the blue LEDs will glow and the sound will last continuously.

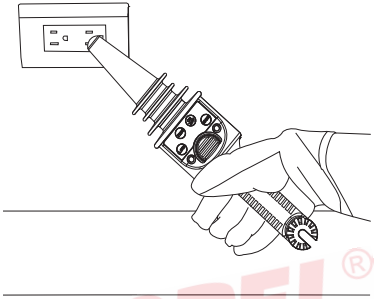

Voltage detection for a wall outlet

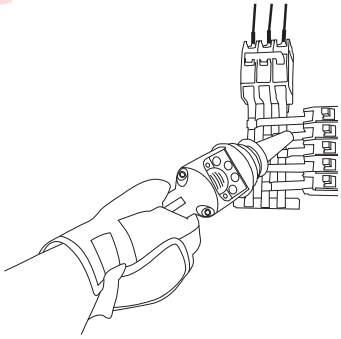

For finding a breaker

https://www.tecpel.com

- **HIGH range (High voltage detection, Hot stick must be attached)**
  Press the ON/OFF button to turn on the high voltage detector.
  The 2 blue LEDs will flash and the buzzer will generate a sound intermittently. The red LED of the HIGH Range will be turned on.
  The original mode is the HIGH range for high voltage detection : 1.5kV~132kV.
  Place the probe sensing tip of the high voltage detector near a high voltage source (1.5kV~132kV), but not touching the high voltage source.
  The blue LEDs will flash very fast and the frequency of the sound will be at the same rate if a high voltage is present.
  When the probe sensing tip is getting closer to the High voltage source, the blue LEDs will glow and the sound will last continuously.

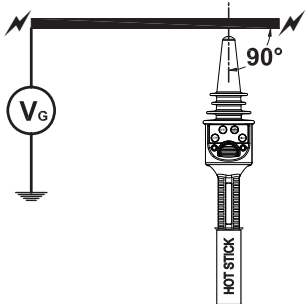

The ideal detection angle

https://www.tecpel.com

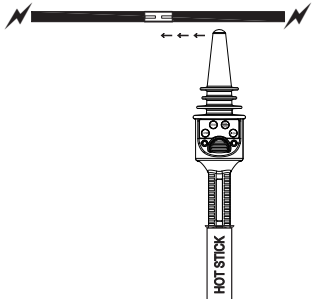

For finding a break of cable

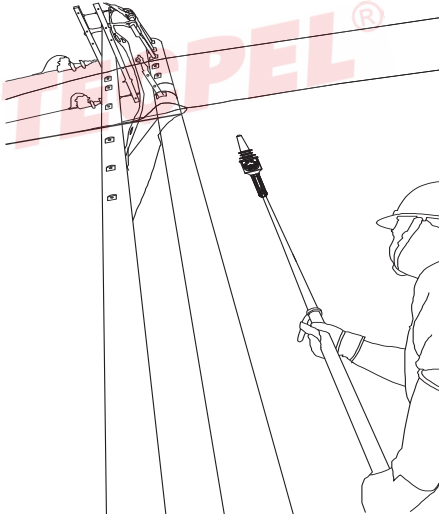

Voltage detection for a line

https://www.tecpel.com

7. Maintenance

- **Battery replacement**

(1) Unscrew the battery cover on the rear with a screwdriver, then slide the battery cover off the tester.
(2) Take out the battery.
(3) Replace with a new battery (9V).
(4) Reinstall the battery cover and fasten the cover screws.

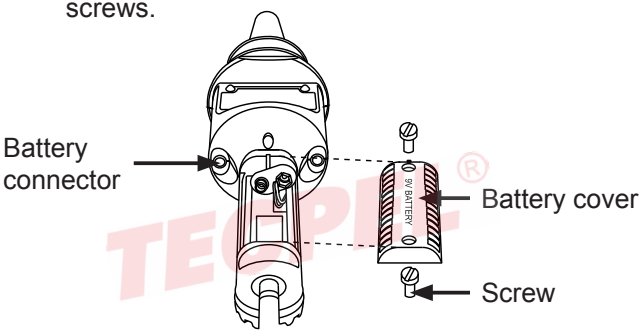

- **Cleaning and storage**

> **⚠ WARNING**
> To avoid electrical shock or damage to the detector, do not get water inside the case.

(1) Periodically wipe the case with a damp cloth and detergent; do not use abrasives or solvents.
(2) If the detector is not used for periods of longer than 60 days, remove the battery and store them separately.

https://www.tecpel.com