UNI-T®



UT803

使用手册

真有效值数字台式万用表

True RMS Digital Bench Type Multimeter

本产品依照UL及CE安全标准设计

P/N:110401104449X
DATE:2018.06.26
REV.7

UNI-T®

UT803

使用说明书

目 录

项 目	页
一、概述	3
二、开箱检查	3
三、安全工作准则	4
四、国际电气符号	5
五、综合指标	5
六、外形结构图	6
七、按钮开关及按键功能	7
八、LCD显示符号	8
九、测量操作说明	10
1.交直流电压测量	10
2.交直流电流测量	12
3.电阻测量	14
4.电路通断测量	16
5.二极管测量	17
6.电容测量	18
7.频率测量	19
8.温度测量	20
9.三极管hFE测量	21
10.数据保持(HOLD)	22
11.手动量程选择(RANGE)	22
12.最大、最小值测量(MAX/MIN)	22
13.串行数据输出(RS232)	22
14.LCD背光控制(LIGHT)	22

项目 页

15. 功能选择(SELECT) 22
16. 供电选择开关(AC/DC) 23
17. 电源开关(POWER) 23
18. 交流. 交流+直流选择按键开关(AC/AC+DC) 23
19. 自动开关功能 23
十、技术指标 24
1. 直流电压测量 24
2. 交流电压测量 25
3. 直流电流测量 27
4. 交流电流测量 28
5. 电阻测量 29
6. 电容测量 30
7. 频率测量 31
8. 二极管测量 32
9. 电路通断测量 32
10. 温度测量 33
11. 三极管hFE测量 34
十一、保养和维修 35
1. 一般的保养和维修 35
2. 更换保险丝管 36
3. 更换电池 37
十二、RS232C、USB接口 38
1. RS232接口连接、设置 38
2. USB接口连接、设置 40

一、概述

UT803是5999计数3 5/6数位，自动量程真有效值数字台式万用表。具有全功能显示，全量程过载保护和独特的外观设计，使之成为性能更为优越的电工测量仪表。本仪表可用于测量：真有效值交流电压和电流、直流电压和电流、电阻、二极管、电路通断、电容、频率、温度(℃)、hFE、最大/最小值等参数。并具备RS232C、USB标准接口，数据保持、欠压显示、背光和自动关机功能。内置供电系统适用于AC220V或二号电池/R20(1.5Vx6节)。

本使用说明书包括有关的安全信息和警告提示等，请仔细阅读有关内容并严格遵守所有的警告和注意事项。

二、开箱检查

打开包装盒取出仪表，请仔细检查下列附件是否缺少或损坏，如发现有任何一项缺少或损坏，请即与你的供应商联系。

●	使用说明书	一本
★	表笔	一副
★	带护套鳄鱼夹	一副
●	电源线（AC220V）	一根
★	点式K型(镍铬～镍硅)热电偶 (仅适用于230℃以下温度的测量)	一根
★	转接插座	一个
●	接口软件光盘	一张
★	RS232C接口线	一根
★	USB接口线	一根
●	合格证	一张

备注：打★号的配件，位于机身背面内取出步骤，参考中文说明书第37页图13。

三、安全工作准则

本仪表严格遵循GB4793电子测量仪器安全要求以及IEC61010-1安全标准进行设计和生产。符合双重绝缘过电压标准CAT Ⅰ 1000V、CAT Ⅱ 600V和污染等级Ⅱ的安全标准。如果未能按照有关的操作说明使用仪表，则可能会削弱或失去仪表为你提供的保护。

1. 使用前要检查仪表和表笔，谨防任何损坏或不正常的现象，如果发现任何异常情况：表笔裸露、机壳损坏、液晶显示器无显示等等，请不要使用。严禁使用没有盖好盖的仪表，否则有电击危险。
2. 表笔破损必须更换，并须换上同样型号或相同电气规格的表笔。
3. 当仪表正在测量时，不要接触裸露的电线、连接器、没有使用的输入端或正在测量的电路。
4. 测量高于直流60V或交流30V以上的电压时，务必小心谨慎，切记手指不要超过表笔护指位，以防触电。
5. 在不能确定被测量值的范围时，须将仪表工作于最大量程位置。
6. 切勿在端子和端子之间，或任何端子和接地之间施加超过仪表上所标注的额定电压或电流。
7. 测量时功能开关必须置于正确的位置。在功能开关转换之前，必须断开表笔与被测电路的连接，严禁在测量进行中转换档位，以防损坏仪表。
8. 进行在线电阻、二极管或电路通断测量之前，必须先将被测器件所在电路中所有的电源切断，并将所有的电容器放尽残余电荷。
9. 测量电流以前，应先检查仪表的保险丝是否完好，并先将被测电流关闭,等仪表可靠连接到电路上之后，再开通被测电流,以免打火花的危险。
10. 不要在高温、高湿、易燃、易爆和强电磁场环境中存放或使用仪表。
11. 请勿随意改变仪表内部接线，以免损坏仪表和危及安全。
12. 当LCD显示器显示“ ”标志时,应及时更换电池，以确保测量精度(仅适用于电池供电)。
13. 测量完毕应及时关断电源。长时间不用时，应取出电池(仅适用于电池供电)。

四、国际电气符号

≂	交流或直流
⚠	警告注意安全标志
⚡	电池欠压
⏚	接地
⧈	双重绝缘
CE	符合欧洲工会(European Union)指令

五、综合指标

1. 信号输入端和COM端之间最大电压：详见各量程输入保护电压说明
2. Hz输入端子设有保险丝(仅用于hFE)：
   (CE) 200mA 250V快熔式保险丝 ϕ5x20mm
3. μA mA 输入端子设有保险丝：
   (CE) 500mA 250V快熔式保险丝 ϕ5x20mm
4. 10A输入端子设有保险丝：
   (CE) 10A 250V快熔式保险丝 ϕ5x20mm
5. AC220V供电端设有保险丝：
   (CE) 200mA 250V快熔式保险丝 ϕ5x20mm
6. 显示：最大读数为5999，每秒约更新2～3次。
7. 量程：自动或手动
8. 极性显示：自动
9. 过量程提示：显示OL
10. 电池欠压提示：(约<7.5V仅适用于电池"⚡"供电)
11. 工作温度：0～40℃(32℉～104℉)
12. 存储温度：-10～50℃(14℉～122℉)
13. 相对湿度：
    0℃～ 30℃以下≤75%，30℃～40℃≤50%
14. 电磁兼容性： 在1V/m的射频场下：总精度=指定精度+量程的5%，超过1V/m以上的射频场没有指定指标。
15. 供电电源交流220V/50Hz或二号电池/R14(1.5Vx6节)(须另购)。
16. 外形尺寸：105x240x310mm
17. 质量：约2kg(不包含附件)

18. 安全标准: IEC 61010: CAT Ⅰ 1000V、 CAT Ⅱ 600V
19. 鉴定: CE

六、外形结构图(见图1)

1. LCD显示窗
2. 功能量程选择旋钮
3. 输入端口
4. 按键组

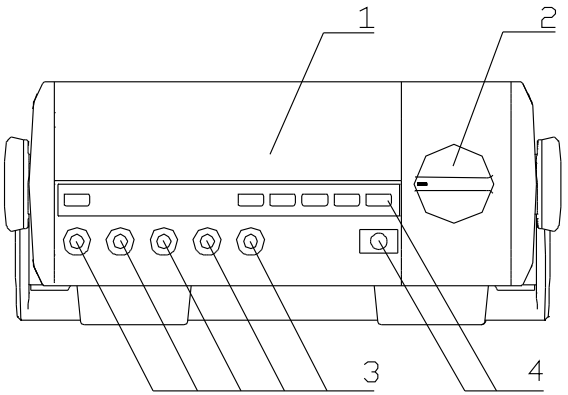

(图1)

七、旋钮开关及按键功能

开关位置	功能说明	开关位置	功能说明
V≂	交直流电压测量	A≂	0.01A～10.00A交直流电流测量
Ω	电阻测量	POWER	电源按键开关
⊳|	二极管,PN 结正向压降测量	LIGHT	背光控制轻触按键
•))	电路通断测量	SELECT	选择交流或直流;电阻,二极管或电路通断;频率或华氏温度轻触键
⊣⊢	电容测量		
Hz	频率测量	HOLD	数据保持轻触按键
°C	摄氏温度测量	RANGE	量程选择轻触按键
°F	华氏温度测量	RS232C	RS232串行数据输出按键
hFE	三极管放大倍数β测量	MAX MIN	最大或最小值选择按键
μA≂	0.1μA～5999μA交直流电流测量	AC AC+DC	交流或交流+直流选择按键开关
mA≂	0.01mA～599.9mA交直流电流测量		

八、LCD显示器(见图2)

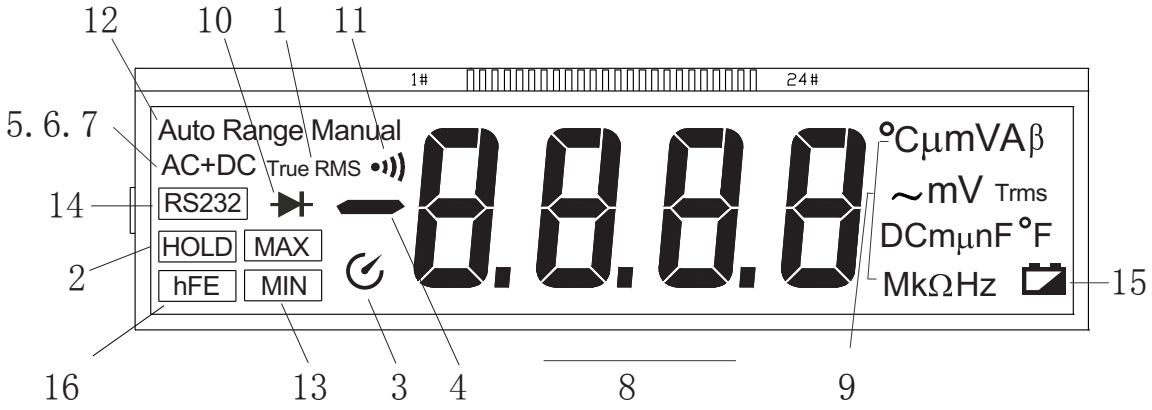

（图2）

1. True RMS 真有效值提示符
2. HOLD 数据保持提示符
3. 具备自动关机功能提示符
4. 显示负的读数
5. AC 交流测量提示符
6. DC 直流测量提示符
7. AC+DC 交流+直流测量提示符
8. OL 超量程提示符
9. 单位提示符:

Ω, kΩ, MΩ	电阻单位:欧姆、千欧姆、兆欧姆
mV V	电压单位:毫伏、伏
μA mA A	电流单位:微安、毫安、安培
nF μF mF	电容单位:纳法、微法、毫法
℃ °F	温度单位:摄氏度、华氏度
kHz MHz	频率单位:千赫兹、兆赫兹
β	三极管放大倍数单位:倍

10. 二极管测量提示符
11. 电路通断测量提示符
12. Auto Range、Manual自动或手动量程提示符
13. MAX MIN 最大或最小值提示符
14. RS232 RS232接口输出提示符
15. 电池欠压提示符
16. HFE 三极管放大倍数测量提示符

1. True RMS 真有效值提示符
2. HOLD 数据保持提示符
3. 具备自动关机功能提示符
4. 显示负的读数
5. AC 交流测量提示符
6. DC 直流测量提示符
7. AC+DC 交流+直流测量提示符
8. OL 超量程提示符
9. 单位提示符:

Ω, kΩ, MΩ	电阻单位:欧姆、千欧姆、兆欧姆
mV V	电压单位:毫伏、伏
A mA A	电流单位:微安、毫安、安培
nF F mF	电容单位:纳法、微法、毫法
℃ °F	温度单位:摄氏度、华氏度
kHz MHz	频率单位:千赫兹、兆赫兹
β	三极管放大倍数单位:倍

10. 二极管测量提示符
11. 电路通断测量提示符
12. Auto Range、Manual自动或手动量程提示符
13. MAX MIN 最大或最小值提示符
14. RS232 RS232接口输出提示符
15. 电池欠压提示符
16. HFE 三极管放大倍数测量提示符

九、测量操作说明

1.交直流电压测量(见图3)

1) 将红表笔插入“V”插孔，黑表笔插入“COM”插孔。
2) 将功能旋钮开关置于“V≂”电压测量档，按SELECT键选择所需测量的交流或直流电压，并将表笔并联到待测电源或负载上。
3) 从显示器上直接读取被测电压值。交流测量显示值为真有效值。
4) 表的输入阻抗均约为10MΩ(除600mV 量程为大于3000MΩ外)，仪表在测量高阻抗的电路时会引起测量上的误差。但是,大部分情况下，电路阻抗在10kΩ以下，所以误差(0.1%或更低)可以忽略。
5) 测量交流加直流电压的真有效值，必须按下AC/AC+DC 选择按钮。
6) 测得的被测电压值小于600.0mV,必须将红表笔改插入“mV”插孔,同时,利用“RANGE”按钮,使仪表处 “手动”600.0mV档(LCD屏有“MANUL”和“mV”显示)。

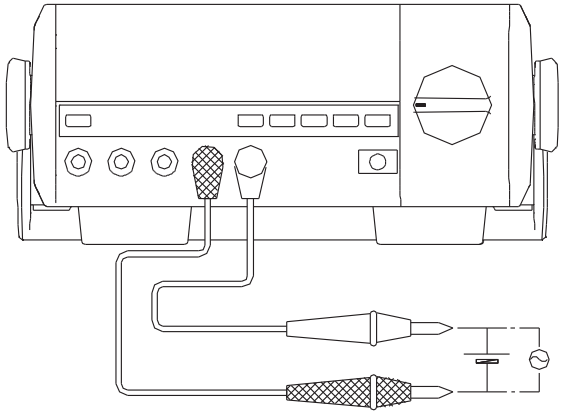

(图3)

⚠ 注意:

- 不要输入高于1000V 的电压。测量更高的电压虽有可能，但仪表的安全是没有保障的。
- 在测量高电压时，要特别注意避免触电。
- 在完成所有的测量操作后，要断开表笔与被测电路的连接。

2. 交直流电流测量(见图4)

1) 将红表笔插入“μA mA”或“A”插孔,黑表笔插入“COM”插孔。
2) 将功能旋钮开关置于电流测量档“μA”“mA”或“A”，按SELECT键选择所需测量的交流或直流电流，并将仪表表笔串联到待测回路中。
3) 从显示器上直接读取被测电流值，交流测量显示真有效值。
4) 测量交流加直流电流的真有效值，必须按下AC/AC+DC 选择按键。

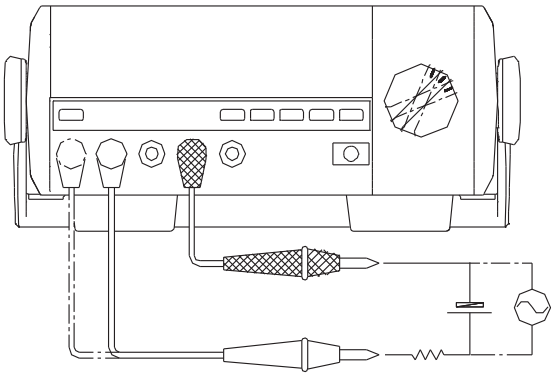

(图4)

⚠ 注意:

- 在仪表串联到待测回路之前，应先将回路中的电流关闭,否则有打火花的危险。
- 测量时应使用正确的输入端口和功能档位，如不能估计电流的大小，应从大电流量程开始测量。
- 大于5A电流测量时，为了安全使用，每测量时间应小于10秒，间隔时间应大于15分钟。
- 表笔插在电流输入端口上时，切勿把测试表笔并联到任何电路上，会烧断仪表内部保险丝,损坏仪表。
- 完成所有的测量操作后，应先关断被测电流再断开表笔与被测电路的连接。对大电流的测量更为重要。

3. 电阻测量(见图5)

1) 将红表笔插入“Ω”插孔，黑表笔插入“COM”插孔。
2) 将功能旋钮开关置于“Ω ·)) ⊣◀”测量档，按SELECT键选择电阻测量，并将表笔并联到被测电阻二端上。
3) 从显示器上直接读取被测电阻值。

⚠ 注意:

- 如果被测电阻开路或阻值超过仪表最大量程时，显示器将显示“OL”。
- 当测量在线电阻时，在测量前必须先将被测电路内所有电源关断，并将所有电容器放尽残余电荷。才能保证测量正确。
- 在低阻测量时，表笔及仪表内部引线会带来约0.2Ω～0.5Ω电阻的测量误差。为获得精确读数，应首先将表笔短路，记住短路显示值，在测量结果中减去表笔短路显示值，才能确保测量精度。
- 如果表笔短路时的电阻值不小于0.5Ω时，应检查表笔是否有松脱现象或其它原因。

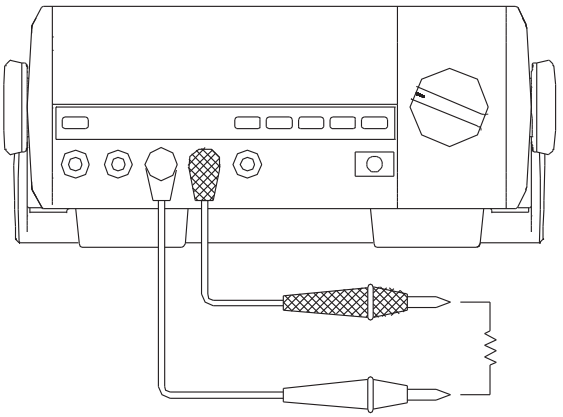

(图5)

- 测量1MΩ以上的电阻时，可能需要几秒钟后读数才会稳定。这对于高阻的测量属正常。为了获得稳定读数尽量选用短的测试线。
- 不要输入高于直流60V或交流30V以上的电压，避免伤害人身安全。
- 在完成所有的测量操作后，要断开表笔与被测电路的连接。

4. 电路通断测量 ·))) （见图6）

1) 将红表笔插入“Ω”插孔,黑表笔插入“COM”插孔。
2) 将功能旋钮开关置于“Ω ·))) ⯈|” 测量档,按SELECT键,选择电路通断测量，并将表笔并联到被测电路负载的两端。如果被测二端之间电阻<10Ω，认为电路良好导通，蜂鸣器连续声响；如果被测二端之间电阻＞30Ω，认为电路断路蜂鸣器不发声。
3) 从显示器上直接读取被测电路负载的电阻值。单位为:Ω。

⚠ 注意:

- 当检查在线电路通断时,在测量前必须先将被测路内所有电源关断,并将所有电容器放尽残余电荷。
- 电路通断测量，开路电压约为-1.2V，量程为600Ω测量档。
- 不要输入高于直流60V或交流30V以上的电压，避免伤害人生安全。
- 在完成所有的测量操作后，要断开表笔与被测电路的连接。

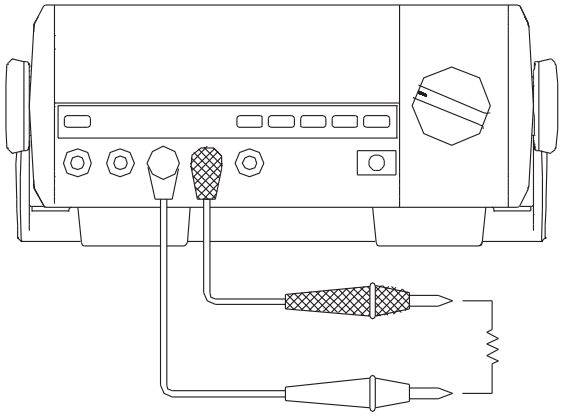

(图6)

5. 二极管测量 ⏩ (见图7)

1) 将红表笔插入“Ω”插孔,黑表笔插入 COM 插孔。红表笔极性为“+”,黑表笔极性为“-”。
2) 将功能旋钮开关置于“Ω ·)) ⏩” 测量档按SELECT键,选择二极管测量，红表笔接到被测二极管的正极，黑表笔接到二极管的负极。
3) 从显示器上直接读取被测二极管的近似正向PN结结电压。对硅 PN结而言，一般约为500～800mV确认为正常值。

⚠ 注意:

- 如果被测二极管开路或极性反接时,显示“OL”。
- 当测量在线二极管时,在测量前必须首先将被测电路内所有电源关断，并将所有电容器放尽残余电荷。
- 二极管测试开路电压约为2.7V。
- 不要输入高于直流60V或交流30V以上的电压,避免伤害人生安全。
- 在完成所有的测量操作后,要断开表笔与被测电路的连接。

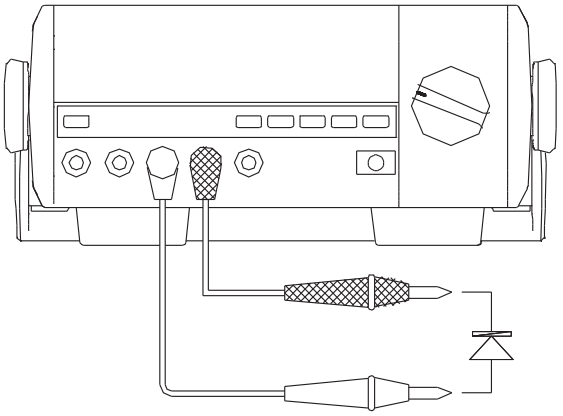

(图7)

6. 电容测量（见图8）

1) 将红表笔插入"Hz Ω mV"插孔,黑表笔插入"COM"插孔。
2) 将功能旋钮开关置于" ⊣⊢ "档位，此时仪表会显示一个固定读数，此数为仪表内部的分布电容值。对于小量程档电容的测量，被测量值一定要减去此值，才能确保测量精度。
3) 在测量电容时,可以使用转接插座代替表笔插入图示表笔的位置(+ -应该对应)；将被测电容插入转接插座的对应孔位进行测量。使用转接插座， 对于小量程档电容的测量将更正确、稳定。

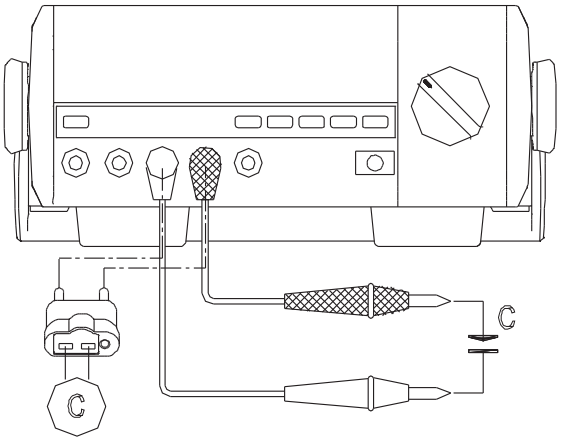

（图8）

⚠ 注意:

- 如果被测电容短路或容值超过仪表的最大量程显示器将显示"OL"。
- 对于大于600μF电容的测量，会需要较长的时间。
- 测试前必须将电容全部放尽残余电荷后再输入仪表进行测量，对带有高压的电容尤为重要，避免损坏仪表和伤害人身安全。
- 在完成测量操作后,要断开表笔与被测电容的连接。

7. 频率测量(见图9)

1) 将红表笔插入"Hz"插孔,黑表笔插入"COM"插孔。
2) 将功能旋钮开关置于Hz° F测量档位， 按SELECT键选择Hz测量。并将表笔并联到待测信号源上。
3) 从显示器上直接读取被测频率值。

注意:

- **测量时必须符合输入幅度a要求:（直流电平为零）**

  10Hz～1MHz　　**时:**150mV ≤ a ≤30Vrms;
  >1MHz～10MHz　**时:**300mV ≤ a ≤30Vrms;
  >10MHz～50MHz　**时:**600mV ≤ a ≤30Vrms;
  >50MHz　　**时:未指定**

- **不要输入高于**30V rms**被测频率电压，避免伤害人身安全。**
- **在完成所有的测量操作后，要断开表笔与被测电路的连接。**

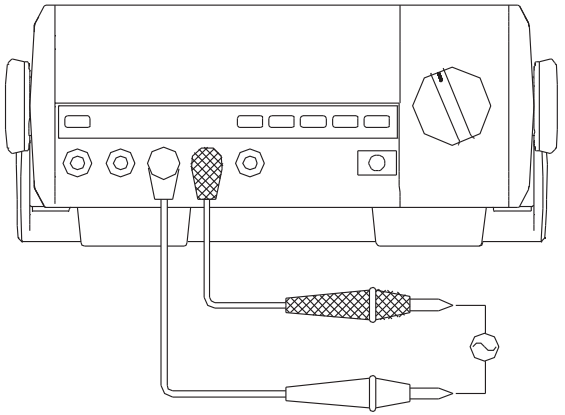

(图9)

8. 温度测量（见图10）

1) 将功能旋钮开关置于“℃”档位。
2) 将转接插座插入“Hz”及“COM”二插孔。
   将温度K型插头按图示插入对应孔位。
3) 将温度探头探测被测温度表面，数秒后从LCD上直接读取被测温度值。
   在进行华氏温度测量时，功能旋钮开关置于“Hz ℉”档位，按SELECT键选择“℉”测量。

⚠ 注意：

- 仪表所处环境温度不得超出18～23℃范围，否则会造成误差，对低温测量更为明显。
- 不要输入高于直流60V或交流30V以上的电压，避免伤害人身安全。
- 仪表测常温，开路.短路若有差，以输入短路为准。
- 在完成所有的测量操作后，取下温度探头。

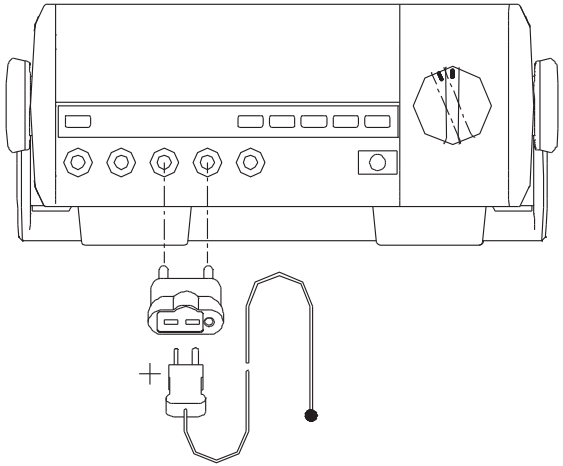

(图10)

9. 三极管hFE测量（见图11）

1）将功能旋钮开关置于“hFE”档位
2）将转接插座插入“μA mA”和“Hz”二插孔。
3）将被测NPN或PNP型三极管插入转接插座对应孔位。
4）从显示器上直接读取被测三极管hFE近似值。

注意：

- **不要输入高于直流60V或交流30V以上的电压，避免伤害人身安全。**
- **在完成所有的测量操作后，取下转接插座。**

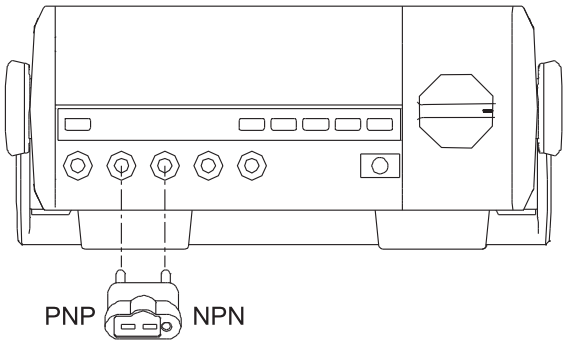

（图11）

10.数据保持(HOLD)

在任何测量情况下，当按下HOLD键时，LCD显示HOLD，仪表随即保持显示测量结果,进入保持测量模式。再按一次HOLD键，仪表退出保持测量模式，随机显示当前测量结果。

11.手动量程选择(RANGE)

按此键退出(Auto) 自动量程进入(Manual) 手动量程模式。当按下时间超过1秒则退出(Manual)手动量程重返(Auto) 自动量程模式。

12.最大、最小值测量(MAX/MIN)

按此键开始保持最大、最小值。逐步按此键可依次循环显示最大、最小值。当按下时间超过1秒则退出最大、最小值测量模式。

13.串行数据输出(RS232)

按此键(RS232) 可以使仪表接口进入或退出测量串行数据输出状态，在数据输出状态下仪表无自动关机功能，LCD"↻"显示熄灭。如果仪表进行HOLD、MAX/MIN、等操作，LCD按相应操作显示数据，但接口输出数据还是当前输入端测量的随机值。接口串行数据输出中没有如下符号"+DC""hFE"和"β"。

14.LCD背光控制(LIGHT)

按此键LCD背光打开，再按一次背光关闭。在交流供电时背光常亮,此键不起作用。

15.功能选择(SELECT)

当测量功能复合在同一个功能位置时,按此键(SELECT)可以选择所需要的测量功能。

16. 供电选择开关(AC/DC)

(AC)220V/50Hz或(DC)二号电池/R20(1.5Vx6节)

17. 电源开关(POWER)

供电电源开或关。

18. 交流、交流+直流选择按键开关(AC/AC+DC)

本选择按键是在交流测量时，选择测量交流还是交流+直流,所以只有在功能旋钮开关选择"V ≂"("mV≂"手动)、"μA≂"、"mA≂"或"A≂",按"SELECT"键选择"AC"测量时,本选择按键才有用。按"SELECT"键选择"DC"测量时,请不要按下本选择按键,否则"+DC"将显示。

19. 自动关机功能

当LCD显示符号 ,且约10分钟内没有转动功能旋钮开关或使用HOLD按键等操作，显示器将消隐显示，同时保存消隐前最后一次测量数据，随即仪表进入微功耗休眠状态。如要唤醒仪表重新工作，除了关闭电源开关后重新打开外,只要按一次HOLD等键即可。唤醒仪表后，LCD显示消隐前最后一次测量数据并处于HOLD模式。转动旋钮开关也能唤醒仪表,但不保持消隐前最后一次测量数据。在开机的同时按下MAX/MIN、RANGE、LIGHT、或RS232键中的任何一个键都可以关闭自动关机功能,并消隐提示符号 。

十、技术指标

误差极限：±（a%读数+字数），保证期一年
环境温度：18～28℃
环境湿度：不大于75%RH

1. 直流电压测量

量　程	分辨力	误差极限:±（a%读数＋字数）
600mV	0.1mV	±(0.6%+2)
6V	0.001V	±(0.3%+2)
60V	0.01V	
600V	0.1V	
1000V	1V	±(0.5%+3)

输入阻抗：均约为10MΩ(除600mV档约为>3000MΩ外)
过载保护：1000V

2. 交流电压测量

量　程	分辨力	误差极限:±（a%读数＋字数）
600mV	0.1mV	40Hz-50kHz:±(0.6%+5)
		>50kHz-100kHz:±(1.0%+5)
6V	0.001V	40Hz-1kHz:±(0.6%+5)
		>1kHz-10kHz:±(1.0%+5)
		>10kHz-100kHz:±(3.0%+5)
60V	0.01V	40Hz-1kHz:±(0.6%+5)
		>1kHz-10kHz:±(1.5%+5)
		>10kHz-20kHz:±(3.0%+5)
		>20kHz-100kHz:±(8.0%+5)
600V	0.1V	40Hz-1kHz:±(0.6%+5)
		>1kHz-10kHz:±(3.5%+5)
1000V	1V	40Hz-1kHz:±(1.2%+3)
		>1kHz-3kHz:±(3.0%+3)

输入阻抗:均约为10MΩ(除600mV档约为>3000MΩ外)
过载保护:1000V
显示:
1) 真有效值(适用於量程的10%至95%)。
2) 交流波峰因素3.0(1000V量程为1.5除外)
3) 输入短路约会有小于30个字剩余读数，但不会影响测量精度。
4) AC+DC测量精度:等于同量程AC误差+1%

3. 直流电流测量

量　程	分辨力	误差极限:±（a%读数＋字数）
600μA	0.1μA	±(0.5%+3)
6000μA	1μA	
60mA	0.01mA	
600mA	0.1mA	±(0.8%+3)
10A	0.01A	±(1.2%+3)

过载保护:
μA mA量程: 保险丝φ5×20mm F 500mA 250V (CE)
10 A量程 : 保险丝φ5×20mm F 10A 250V (CE)

⚠ 注意:

≤5A时允许连续测量，当大于5A时，连续测量时间应小于10秒,间隔时间应大于15分钟。

4. 交流电流测量

量　程	分辨力	误差极限:±（a%读数＋字数）
600μA	0.1μA	40Hz-10kHz:±(1.0%+5) >10kHz-15kHz:±(2.0%+5)
6000μA	1μA	
60mA	0.01mA	
600mA	0.1mA	40Hz-10kHz:±(1.0%+5)
		>10kHz-15kHz:±(3.0%+5)
10A	0.01A	40Hz-5kHz:±(2.0%+6)

显示:
1) 真有效值(适用於量程的10%至95%)。
2) 交流波峰因素3.0。
3) 输入短路约会有小于30个字剩余读数，但不会影响测量精度。
4) AC+DC测量误差:等于同量程AC误差+1%
过载保护:
μA mA量程: 保险丝φ5×20mm F 500mA 250V (CE) 10A量程 : 保险丝φ5×20mm F 10A 250V (CE)

⚠ 注意:

≤5A时允许连续测量，当大于5A时，连续测量时间应小于10秒,间隔时间应大于15分钟。

5. 电阻测量

量　程	分辨力	误差极限:±（a%读数＋字数）
600Ω	0.1Ω	±(0.8%+3)+表笔短路电阻值
6kΩ	0.001kΩ	±(0.5%+2)
60kΩ	0.01kΩ	
600kΩ	0.1kΩ	
6MΩ	0.001MΩ	±(0.8%+2)
60MΩ	0.01MΩ	±(1.2%+3)

过载保护：250Vrms

6. 电容测量

量　程	分辨力	误差极限:±（a%读数＋字数）
6nF	0.001nF	±(2.5%+5)
60nF	0.01nF	±(2.5%+5)
600nF	0.1nF	±(2.0%+5)
6μF	0.001μF	
60μF	0.01μF	
600μF	0.1μF	±(3.0%+4)
6mF	0.001mF	±(5.0%+4)

显示　　：6nF 60nF 600nF档读数须减去表笔开路电容值
过载保护:250Vrms

7. 频率测量

量　程	分辨力	误差极限:±（a%读数＋字数）
6kHz	0.001kHz	±(0.1%+3)
60kHz	0.01kHz	
600kHz	0.1kHz	
6MHz	0.001MHz	
60MHz	0.01MHz	

过载保护: 250Vrms
输入幅度:（直流电平为零）
10Hz～1MHz时　　:150mV≤a≤30Vrms,
＞ 1MHz～10MHz时 :300mV≤a≤30Vrms
＞10MHz～50MHz时 :600mV≤a≤30Vrms
>50MHz时　　:未指定

8. 二极管测量

量　程	分辨力	备　　注
⊣◀	0.01V	开路电压约 2.7V，工作电流约1mA

过载保护：250Vrms

9. 电路通断测量

量　程	分辨力	备　　注
•))	1Ω	开路电压约为-1.2V；电路断开电阻值设定为：＞30Ω，蜂鸣器不发声；电路良好导通阻值设定为:≤10Ω，蜂鸣器连续发声。

过载保护：250Vrms

10. 温度测量

量　程	分辨力	误差极限:±（a%读数＋字数）	
℃	1℃	(-40～0℃)	±(8.0%+5)
		(>0～400℃)	±(1.0%+3)
		(>400～1000℃)	±(1.5%+3)
℉	1℉	(-40～32℉)	±(8.0%+5)
		(>32～752℉)	±(1.5%+5)
		(>752～1832℉)	±2.5%

过载保护　：250Vrms

温度传感器：适用K型(镍铬～镍硅)热电偶。附件为点式K型(镍铬～镍硅)热电偶，适用于230℃以下温度的测量。

11. 三极管hFE测量

量　程	分辨力	备　　注
hFE	1β	Vce≈2.2V Ibo≈10μA 1000 βMAX

过载保护：保险丝φ5×20mm、F 200mA 250V(CE)
保险丝φ5×20mm、F 500mA 250V(CE)

十一、保养和维修

⚠ 警告:

在打开仪表上盖之前，应确定电源已关闭；表笔已离开输入端口和被测电路。

1. 一般的保养和维修

- 清洁仪表只能使用湿布和少量洗涤剂，切忌用化学溶剂擦拭表壳。
- 如发现仪表有任何异常，应立即停止使用并送维修。
- 在有需要对仪表进行校验或维修时，请由有资格的专业维修人员或指定的维修部门维修。
- 不使用时应关断仪表的电源、长期不用时应取出电池。
- 存放仪表应避免潮湿、高温和强电磁场。

2. 更换保险丝管（见图12）

⚠ 警告：

在测量电流、三极管hFE时，仪表显示毫无反应，应立即检查仪表内置相关保险丝管有无被烧断，如确认保险丝管已被烧断，应立即按原规格更换保险丝管。

保险丝管规格：

F1　200mA250V快熔式保险丝 ϕ5x20mm (AC220V)
F2　10A250V快熔式保险丝　ϕ5x20mm (A)
F3　500mA250V快熔式保险丝 ϕ5x20mm (μA、mA)
F4　200mA250V快熔式保险丝 ϕ5x20mm (hFE)

操作步骤：

1) 把电源开关置于“关”位置，把电源线的插头从电源插座中拔去,并从输入插孔中移走表笔。
2) 打开仪表电源插座的保险丝盖，　更换已被烧断的保险丝管F1。
3) 用螺丝刀拧下上盖固定拴，卸下上盖，即可更换已被烧断的保险丝管F2，F3。
4) F4在主板上更换。

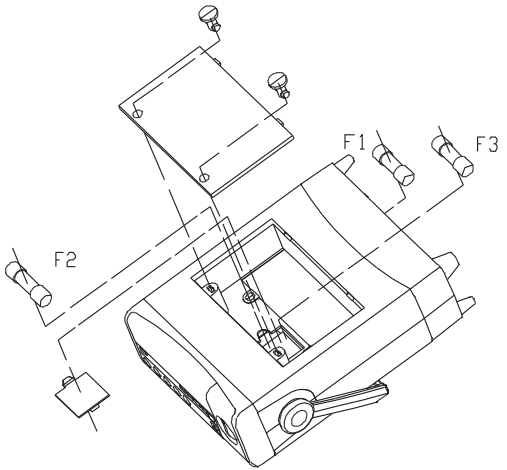

（图12）

3. 更换电池

⚠ 警告:

当LCD显示欠压 提示符时，应即时更换内置电池否则会影响测量精度(仅适用于电池供电)。电池规格:二号电池/R14(1.5Vx6节)

操作步骤：类同更换保险丝管操作步骤(见图13)。

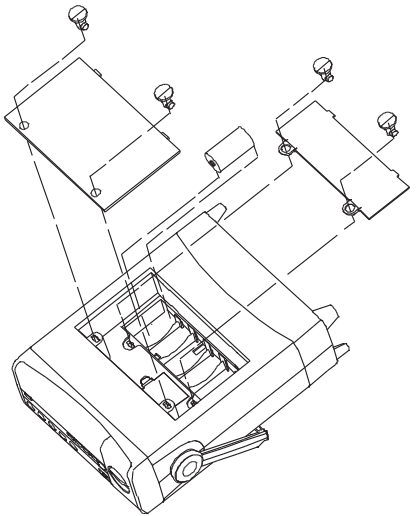

(图13)

十二、RS232C、USB接口

1.RS232C接口连接、设置:

A.仪表与电脑的连接（见图14）

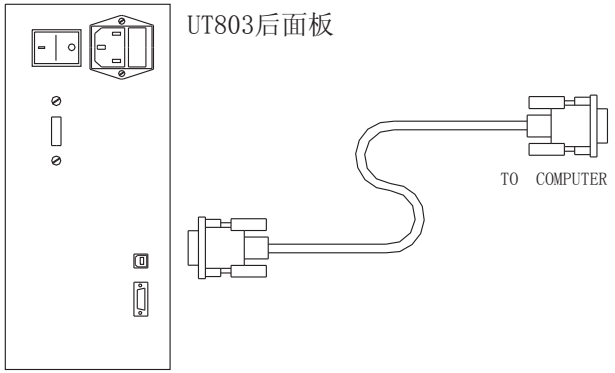

（图14）

B.RS232C接口线的连接:

DMM		电脑 Computer	
D-sub 9 Pin Male		D-sub 9 Pin Female	D-sub 25 Pin Female
1 (DCD)	----------	1 (DCD)	8 (DCD)
2 (RXD)	----------	3 (RXD)	2 (RXD)
3 (TXD)	----------	2 (TXD)	3 (TXD)
4 (DTR)	----------	4 (DTR)	20 (DTR)
5 (SG)	----------	5 (SG)	7 (SG)
6 (DSR)	----------	6 (DSR)	6 (DSR)
7 (RTS)	----------	7 (RTS)	4 (RTS)
8 (CTS)	----------	8 (CTS)	5 (CTS)
9 (RI)	----------	9 (RI)	22 (RI)

C.RS232C接口设定

RS232C接口进行通讯时，其默认的设定值为:(运行电脑接口软件时，软件将自动设置为以下值)

波特率 Baud Rate 19200,
起始位 Start bit 1
停止位 Stop bit 1
数据位数 Data bits 7
校验 Parity odd

D.有关RS232C接口软件的安装及应用参见光盘内操作说明文件。

2. USB接口的连接、设置:

A. 仪器和电脑连接（见图15）

B. USB接口电缆(可通用标准USB打印线)。

C. USB接口的设定

当将仪表和USB相连时，先安装USB接口的驱动程序，安装参见光盘内的安装说明文件。

D. 在操作系统的计算机设备管理器的端口部分出现 USB Serial Port （com x），在计算机和仪表相连时采用相一致的 com x。

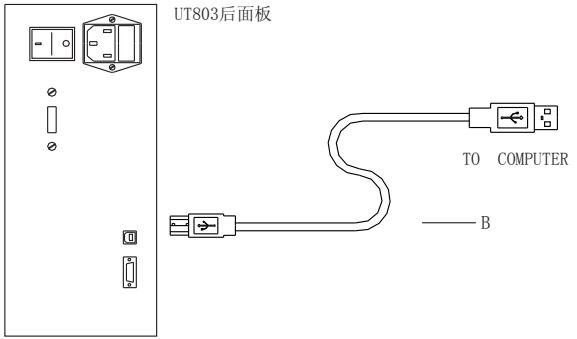

（图15）

优利德®
优利德科技(中国)股份有限公司
地址:中国广东省东莞松山湖高新技术产业
开发区工业北一路6号
电话:(86-769)8572 3888
邮编: 523 808
http://www.uni-trend.com.cn

---说明书内容如有变更，恕不另行通知---

UNI-T®

Model UT803
OPERATING MANUAL

TABLE OF CONTENTS

TITLE	PAGE
Overview	3
Unpacking Inspection	4
Safety Information	5
Rules For Safe Operation	6
International Electrical Symbols	8
The Meter Structure	9
Rotary Switch	10
Functional Buttons	11
Display Symbols	12
Measurement Operation	16
A. DC or AC Voltage Measurement	16
B. DC or AC Current Measurement	18
C. Measuring Resistance	20
D. Testing for Continuity	22
E. Testing Diodes	24
F. Capacitance Measurement	26
G. Frequency Measurement	28
H. Temperature Measurement	30
I . Measuring Transistor	32
Operation of Hold Mode	33
The POWER Button	33
The SELECT Button	33
Turning on the Display Backlight	34
The RANGE Button	34
The MAX MIN Button	35
AC/AC+DC Button	35

TITLE	PAGE
POWER INPUT Switch	35
Sleep Mode	36
RS232 Button	36
General Specifications	37
Accuracy Specifications	38
A. DC Voltage	38
B. AC Voltage	39
C. DC Current	41
D. AC Current	42
E. Resistance	43
F. Continuity Test	44
G. Diode Test	44
H. Capacitance	45
I . Frequency	46
J. Temperature	47
K. Transistor	47
Maintenance	48
A. General Service	48
B. Replacing the Fuses	49
C. Replacing the Battery	51
RS232C and USB Serial Port	52
System Requirements for Installing the UT803 Interface Program	52
RS232C Serial Port	53
A. Connecting between the Meter and computer	53
B. RS232C Port Cable	54
C. Setting of RS232C Serial Ports	54
USB Serial Port	55
A. Connecting between the Meter and computer	55
B. Setting of USB Serial Ports	55

Overview

This Operating Manual covers information on safety and cautions. Please read the relevant information carefully and observe all the Warnings and Notes strictly.

⚠ Warning

To avoid electric shock or personal injury, read the "Safety Information" and "Rules for Safety Operation" carefully before using the Meter.

Digital Bench-Type True RMS Multimeter **Model UT803** (hereafter referred to as "the Meter") has autorange and manual range options with maximum reading 5999 and 3 5/6 digits which has a unique outlook design.

In addition to all the conventional features including DC/AC voltage, current, resistance, diode, continuity test, capacitance, temperature ^{0}C and ^{0}F, transistor, max/min, there is a data hold, low battery display, sleep mode, RS232C and USB standard serial port for easy connection with computer to realize macro recording and monitoring and capture of transient dynamic data, displaying change of waveform during the measurement, providing data and evidence to engineering technicians for scientific research.

This is also a highly applied digital multimeter of good performance with full overload protection and display backlight function.

Unpacking Inspection

Open the package case and take out the Meter. Check the following items carefully to see any missing or damaged part:

Item	Description	Qty
1	Operating Manual	1 piece
2	Installation guide and computer interface software (CD-ROM)	1 piece
3	Power Cord (AC 220V)	1 piece
4	Alligator Clip	1 pair
5	Multi-Purpose Socket	1 piece
6	Point Contact Temperature Probe (to be used under 230°C temperature measurement)	1 piece
7	Test Lead	1 pair
8	RS232C Interface Cable	1 piece
9	USB Interface Cable	1 piece

ATTENTION:
Accessories Item 4 to 9（english manual figure 13- page 51） are stored in the back of the machine.
In the event you find any missing or damage, please contact your dealer immediately.

Safety Information

This Meter complies with the standards IEC61010: in pollution degree 2, overvoltage category (CAT. I 1000V, CAT.II 600V) and double insulation.

CAT III: Distribution level, fixed installation, with smaller transient overvoltages than CAT. IV
CAT IV: Primary supply level, overhead lines, cable systems etc.

Use the Meter only as specified in this operating manual, otherwise the protection provided by the Meter may be impaired.
In this manual, a **Warning** identifies conditions and actions that pose hazards to the user, or may damage the Meter or the equipment under test.

A **Note** identifies the information that user should pay attention on.

International electrical symbols used on the Meter and in this Operating Manual are explained on page 8.

Rules For Safe Operation

⚠ Warning

To avoid possible electric shock or personal injury, and to avoid possible damage to the Meter or to the equipment under test, adhere to the following rules:

- Before using the Meter inspect the case. Do not use the Meter if it is damaged or the case (or part of the case) is removed. Look for cracks or missing plastic. Pay attention to the insulation around the connectors.
- Inspect the test leads for damaged insulation or exposed metal. Check the test leads for continuity. Replace damaged test leads with identical model number or electrical specifications before using the Meter.
- Do not apply more than the rated voltage, as marked on the Meter, between the terminals or between any terminal and grounding.
- The rotary switch should be placed in the right position and no any changeover of range shall be made during measurement is conducted to prevent damage of the Meter.
- When the Meter working at an effective voltage over 60V in DC or 30V rms in AC, special care should be taken for there is danger of electric shock.
- Use the proper terminals, function, and range for your measurements.
- If the value to be measured is unknown, use the maximum measurement position and reduce the range step by step until a satisfactory reading is obtained.
- Do not use or store the Meter in an environment of high temperature, humidity, explosive, inflammable and strong magnetic field. The performance of the Meter may deteriorate after dampened.
- When using the test leads, keep your fingers behind the finger guards.
- Disconnect circuit power and discharge all high-voltage capacitors before testing resistance, continuity, diodes, current, or capacitance.
- Before measuring current, check the Meter's fuses and turn off power to the circuit before connecting the Meter to the circuit.

- Replace the battery as soon as the battery indicator appears. With a low battery, the Meter might produce false readings that can lead to electric shock and personal injury.
- Remove test leads, temperature probe, RS232C interface cable, USB interface cable and alligator clip from the Meter and turn the Meter power off before opening the Meter case.
- When servicing the Meter, use only the same model number or identical electrical specifications replacement parts.
- The internal circuit of the Meter shall not be altered at will to avoid damage of the Meter and any accident.
- Soft cloth and mild detergent should be used to clean the surface of the Meter when servicing. No abrasive and solvent should be used to prevent the surface of the Meter from corrosion, damage and accident.
- The Meter is suitable for indoor use.
- Turn the Meter power off when it is not in use.
- Take out the battery when not using for a long time if using battery to power on the Meter.
- When using battery to power on the Meter, constantly check the battery as it may lead when it has been using for some time, replace the battery as soon as leaking appears. A leaking battery will damage the Meter.

International Electrical Symbols

≂	AC or DC
⏚	Grounding
⧈	Double Insulated
⚠	Warning. Refer to the Operating Manual
	Deficiency of Built-In Battery
•))	Continuity Test
⊣▶⊢	Diode
⊣⊢	Capacitance Test
▭	Fuse
CE	Conforms to Standards of European Union

The Meter Structure (see figure 1)

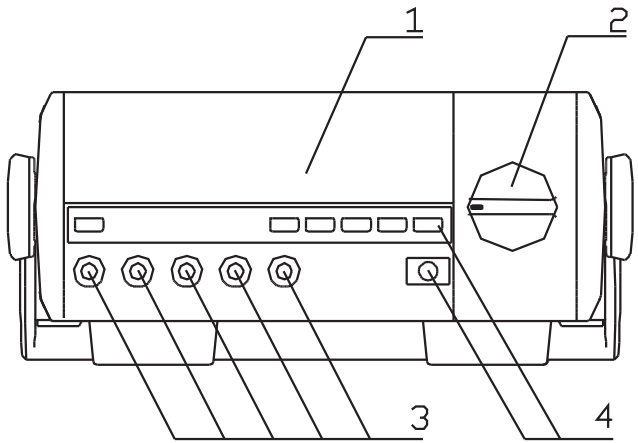

(Figure 1)

1. LCD Display
2. Rotary Switch
3. Input Terminals
4. Functional Buttons

Rotary Switch

Below table indicated for information about the rotary switch positions:

Rotary Switch Position	Function
V≂	AC and DC voltage measurement
•)) ⊣⊢ Ω	•)) :Continuity test.
	⊣⊢ :Diode test.
	Ω :Resistance measurement.
⊣⊢	Capacitance test
Hz	Hz :Frequency measurement.
°F	°F :Temperature in Fahrenheit
°C	Temperature in celsius
hFE	Transistor test
µA≂	AC or DC current measurement range from 0.1uA to 5999uA.
mA≂	AC or DC current measurement range from 0.01mA to 599.9mA.
A≂	AC or DC current measurement range from 0.01A to 10.00A.

Functional Buttons

Below table indicated for information about the functional button operations.

Button	Operation Performed
POWER	Turn the power on and off.
LIGHT	Turn the display backlight on and off.
SELECT	l Switches between AC and DC measurement. l Switches between continuity and diode and resistance measurements l Switches between frequency and Fahrenheit temperature.
HOLD	Press **HOLD** to enter and exit the Hold mode in any mode, the Meter beeps.
RANGE	Press **RANGE** to switch between manual and auto ranging.
RS232C	Turn on or off the serial port interface without changing the original setting.
MAX MIN	Starts recording of maximum and minimum values. Steps the display through high (MAX) and low (MIN).
AC AC+DC	To select AC or AC+DC measurement.

Display Symbols (see figure 2)

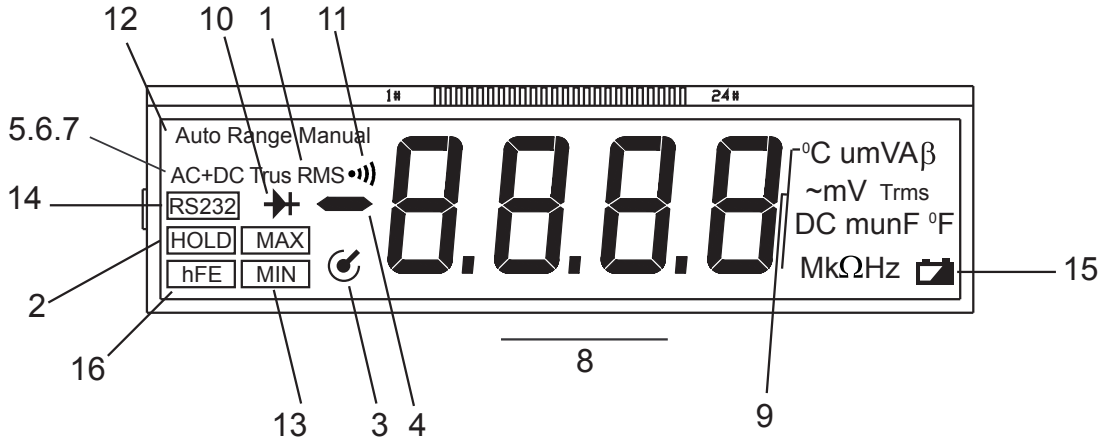

(Figure 2)

Number	Symbol	Meaning
1	**True RMS**	Indicator for true rms value.
2	**HOLD**	Data hold is active.
3		Sleep Mode feature is enabled.
4		Indicates negative reading.
5	**AC**	Indicator for AC voltage or current.
6	**DC**	Indicator for DC voltage or current
7	**AC+DC**	Indicator for AC+DC measurement
8	**OL**	The input value is too large for the selected range.
9	**Ω,KΩ,MΩ**	Ω :Ohm. The unit of resistance.
		KΩ :kilohm. 1 x 10^3 or 1000 ohms.
		MΩ :Megaohm.1x10^6 or 1,000,000 ohms.
	A, mA, µA	A :Amperes (amps).The unit of current.
		mA:Milliamp. 1 x 10^{-3} or 0.001 amperes.
		µA : Microamp. 1x 10^{-6} or 0.000001 amperes.

Number	Symbol	Meaning
12	**AutoRange** **Manual**	Indicator of Auto or manual range
13	MAX MIN	Display of maximum or minimum value.
14	RS232	Data output is in progress.
15		The battery is low. ⚠Warning: To avoid false readings, which could lead to possible electric shock or personal injury, replace the battery as soon as the battery indicator appears.
16	hFE	Transistor test is on

Number	Symbol	Meaning
9	**V, mV**	V : Volts. The unit of voltage.
		mV: Millivolt.1 x 10^{-3} or 0.001 volts.
	F, mF, μF,nF	F : Farad.The unit of capacitance.
		mF: Millifarad.1 x 10^{-3} or 0.001 farads
		μF : Microfarad.1x10^{-6} or 0.000001 farads.
		nF : Nanofarad.1 x 10^{-9} or 0.000000001 farads.
	^{0}C, ^{0}F	Centigrade temperature
		Temperature in Fahrenheit
	Hz, kHz, MHz	Hz : Hertz. The unit of frequency in cycles/second.
		kHz : Kilohertz. 1 x 10^3 or 1,000 hertz.
		MHz: Megahertz. 1 x 10^6 or 1,000,000 hertz.
	β	Unit of transistor.
10		Test of diode
11		The continuity buzzer is on.

Measurement Operation

A. DC or AC Voltage Measurement (See figure 3)

⚠ **Warning**
To avoid harms to you or damages to the Meter from electric shock, please do not attempt to measure voltages higher than 1000V although readings may be obtained.

To measure DC/AC voltage, connect the Meter as follows:

1. Insert the red test lead into the **V** terminal and the black test lead into the **COM** terminal. If the measured value is less than 600mV, insert the red test lead into **mV** terminal instead and press **RANGE** button to select manual range 600.0mV mode, the LCD displays "**MANUAL**" and "**mV**".
2. Set the rotary switch to **V≂** ; press **SELECT** button to select DC or AC measurement mode.
3. Connect the test leads across with the object being measured. The measured value shows on the display. AC measurement displays True RMS value.

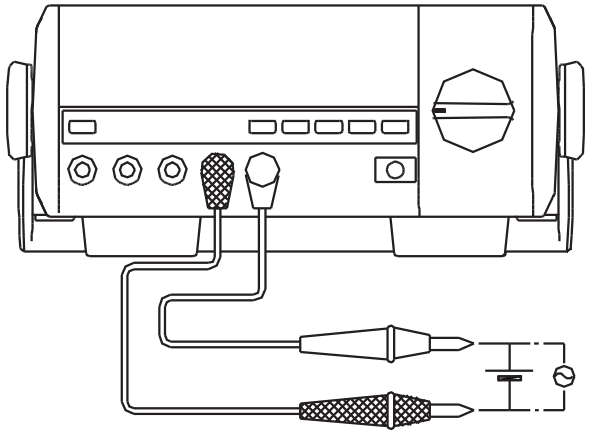

(Figure 3)

4. Press **AC/AC+DC** button to measure AC+DC voltage's true RMS.

Note

- In each range, the Meter has an input impedance of 10MΩ except 600mV range has 3000MΩ. This loading effect can cause measurement errors in high impedance circuits. If the circuit impedance is less than or equal to 10kΩ, the error is negligible (0.1% or less).
- When DC/AC voltage measurement has been completed, disconnect the connection between the testing leads and the circuit under test, and remove the testing leads away from the input terminals of the Meter.

B. DC or AC Current Measurement (See figure 4)

⚠ **Warning**

Before connect the Meter in serial with the tested return circuit, close the return circuit's current to avoid the dangerous of sparking.

If the fuse burns out during measurement, the Meter may be damaged or the operator himself may be hurt. Use proper terminals, function, and range for the measurement. When the testing leads are connected to the current terminals, do not parallel them across any circuit.

To measure current, do the following:

1. Insert the red test lead into the **μA mA** terminal and the black test lead into the **COM** terminal.
2. Set the rotary switch to an appropriate measurement position in **μA≂**, **mA≂** or **A≂**, press **SELECT** button to select AC or DC measurement mode.
3. Connect the test leads in serial with the object being measured. The measured value shows on the display. AC measurement displays True RMS value.
4. Press **AC/AC+DC** button to measure AC+DC current's true RMS

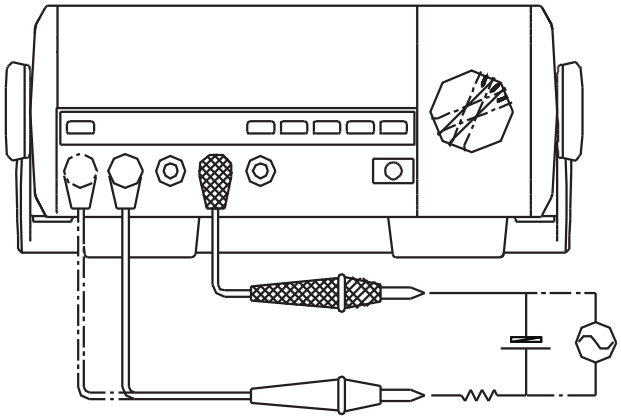

(Figure 4)

Note

- If the value of current to be measured is unknown, use the maximum measurement position, and reduce the range step by step until a satisfactory reading is obtained.
- For safety sake, each measurement time of high current (>5A) should be less than 10 seconds and the interval time between 2 measurements should be greater than 15 minutes.
- When current measurement has been completed, disconnect the connection between the testing leads and the circuit under test, and remove the testing leads away from the input terminals of the Meter.

C. Measuring Resistance (see figure 5)

⚠ **Warning**

To avoid damages to the Meter or to the devices under test, disconnect circuit power and discharge all the high-voltage capacitors before measuring resistance. To avoid harms to you, please do not attempt to input voltages higher than 60V DC or 30V AC.

To measure resistance, connect the Meter as follows:

1 .Insert the red test lead into the Ω terminal and the black test lead into the **COM** terminal.

2 .Set the rotary switch to Ω •)) ⊣⊢, press **SELECT** button to select Ω measurement mode.

3 .Connect the test leads across with the object being measured. The measured value shows on the display.

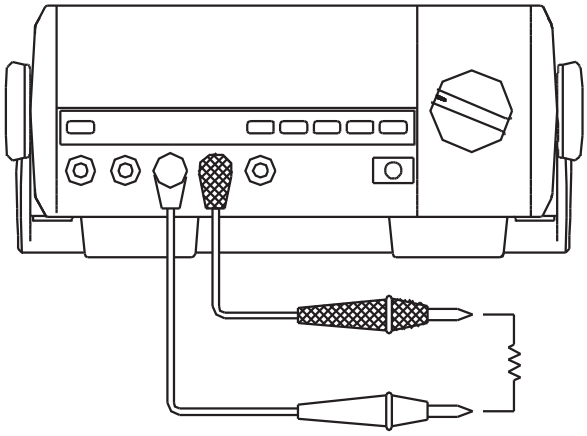

(Figure 5)

Note

- The test leads and the Meter inside wire will bring around 0.2Ω to 0.5Ω of error to resistance measurement when measuring low resistance. To obtain accurate readings in low-resistance, short-circuit the test lead beforehand and record the reading obtained, call this reading as X. Then use the equation: measured resistance value (Y) – (X) = accurate readings of resistance.
- If Ω reading with shorted test leads is not < 0.5Ω, check for loose test leads, incorrect function selection, or any other reasons.
- When measuring high resistance (>1MΩ), it is normal to take several seconds to obtain a stable reading. In order to obtain stable reading, choose shorter test lead to carrying out measurement.
- The LCD displays **OL** indicating open-circuit for the tested resistor or the resistor value is higher than the maximum range of the Meter.
- When resistance measurement has been completed, disconnect the connection between the testing leads and the circuit under test, and remove the testing leads away from the input terminals of the Meter.

D. Testing for Continuity (See figure 6)

⚠ **Warning**
To avoid damages to the Meter or to the devices under test, disconnect circuit power and discharge all the high-voltage capacitors before testing for continuity. To avoid harms to you, please do not attempt to input voltages higher than 60V DC or 30V AC.

To test for continuity, connect the Meter as below:

1. Insert the red test lead into the Ω terminal and the black test lead into the **COM** terminal.
2. Set the rotary switch to Ω •)) ⊣ and press **SELECT** button to select •)) measurement mode.
3. Connect the test lead across with the object being measured. The buzzer sounds if the resistance of a circuit under test is < 10Ω, the circuit is in good condition. The buzzer does not sound if the resistance of a circuit under test is >30Ω , the circuit is broken.
4. The measured value shows on the display and the unit is Ω.

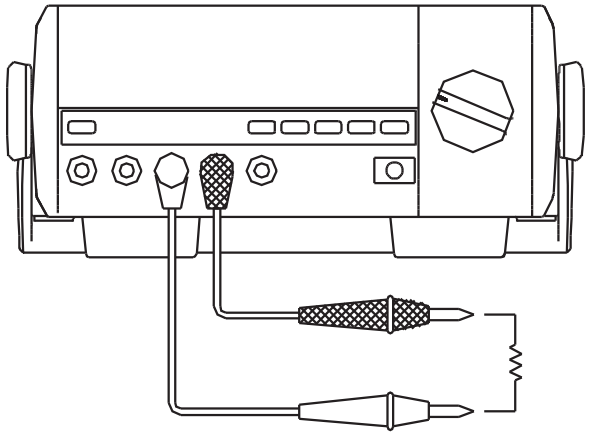

(Figure 6)

Note

- Open circuit voltage around -1.2V and range is 600Ω.
- When continuity testing has been completed, disconnect the connection between the testing leads and the circuit under test, and remove the testing leads away from the input terminals of the Meter.

E. Testing Diodes (See figure 7)

⚠ **Warning**

To avoid possible damage to the Meter and to the device under test, disconnect circuit power and discharge all high-voltage capacitors before testing diodes.

To avoid harms to you, please do not attempt to input voltages higher than 60V DC or 30V AC.

Use the diode test to check diodes, transistors, and other semiconductor devices. The diode test sends a current through the semiconductor junction, and then measures the voltage drop across the junction. A good silicon junction drops between 0.5V and 0.8V.

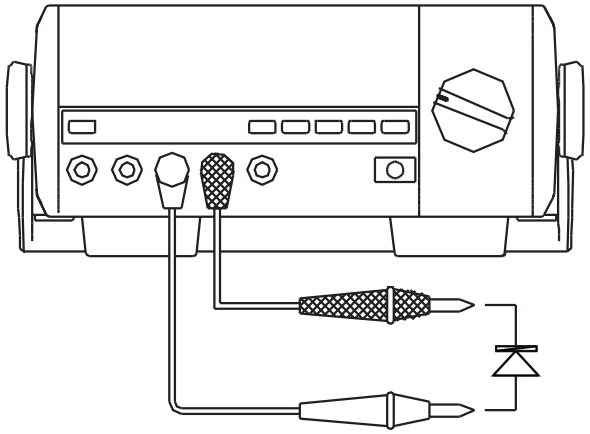

(Figure 7)

To test a diode out of a circuit, connect the Meter as follows:

1. Insert the red test lead into Ω terminal and the black test lead into the **COM** terminal.
2. Set the rotary switch to Ω •)) ⊣⊢ and press **SELECT** button to select ⊣⊢ measurement mode.
3. For forward voltage drop readings on any semiconductor component, place the red test lead on the component's anode and place the black test lead on the component's cathode. The measured value shows on the display.

Note

- Connect the test leads to the proper terminals as said above to avoid error display. The LCD will display **OL** indicating diode being tested is open or polarity is reversed. The unit of diode is Volt (V), displaying the forward voltage drop readings.
- Open circuit voltage is around 2.7V.
- When diode testing has been completed, disconnect the connection between the testing leads and the circuit under test, and remove the testing leads away from the input terminals of the Meter.

F. Capacitance Measurement (See figure 8)

⚠ **Warning**

To avoid damage to the Meter or to the equipment under test, disconnect circuit power and discharge all high-voltage capacitors before measuring capacitance. Use the DC Voltage function to confirm that the capacitor is discharged.

To measure capacitance, connect the Meter as follows:

1. Insert the red test lead into the **HzΩmV** terminal and the black test lead into the **COM** terminal.
2. Set the rotary switch to ⊣⊢ .
3. Connect the test leads across with the object being measured. The measured value shows on the display.

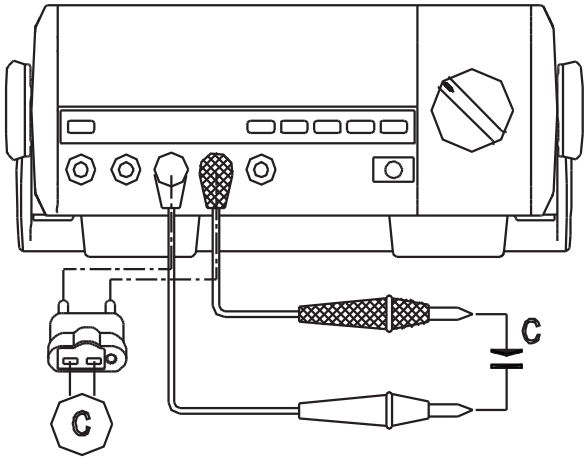

(Figure 8)

Note

- The Meter displays a fixed value which is the distributed capacitor's value of the inside Meter. To ensure accuracy, it is necessary to subtract this value from the measured value when measuring small capacitor.
- Multi-purpose socket can be used instead of testing leads. Insert the capacitor being tested into the corresponding input terminal of the multi-purpose socket. When measuring small capacitor value, more accurate value can be obtained using multi-purpose socket.
- It is normal to take a longer time when testing a capacitor value higher than 600μF.
- The LCD displays **OL** indicating the tested capacitor is shorted or it exceeds the maximum range.
- When capacitance measurement has been completed, disconnect the connection between the testing leads and the circuit under test and remove the testing leads away from the input terminals of the Meter.

G. Frequency Measurement (see figure 9)

⚠ **Warning**

To avoid harms to you, please do not attempt to input tested frequency's voltages higher than 30V rms.

To measure frequency, connect the Meter as follows:

1. Insert the red test lead into the **Hz** terminal and the black test lead into the **COM** terminal.
2. Set the rotary switch to **Hz^{0}F** and press **SELECT** button to select **Hz** measurement mode.
3. Connect the test leads across with the object being measured. The measured value shows on the display.

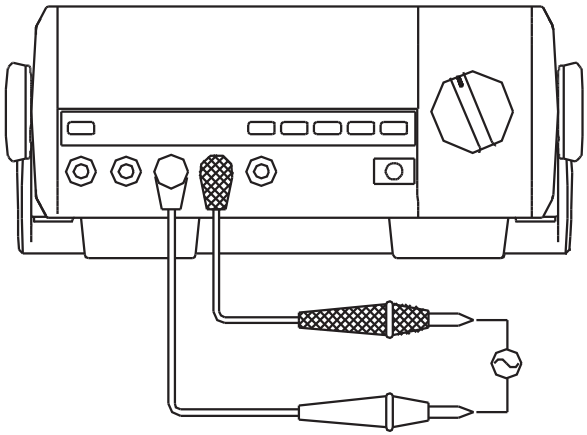

(Figure 9)

Note

- When making frequency measurement, it must comply with the following scope (a) requirement:
  When 10Hz ~ 1MHz :150mV ≤ a ≤ 30V rms
  When > 1MHz~ 10MHz :300mV ≤ a ≤ 30V rms
  When > 10MHz~ 50MHz :600mV ≤ a ≤ 30V rms
  When > 50MHz :Unspecified
- When frequency measurement has been completed, disconnect the connection between the testing leads and the circuit under test, and remove the testing leads away from the input terminals of the Meter.

H. Temperature Measurement (see figure 10)

⚠ **Warning**

To avoid harms to you, please do not attempt to input voltages higher than 60V DC or 30V AC.

To measure temperature, connect the Meter as follows:

1. Set the rotary switch to ^{0}**C** to measure degree celsius temperature or **Hz**^{0}**F** and press **SELECT** button to select ^{0}**F** measurement mode to measure Fahrenheit temperature.
2. Insert the multi-purpose socket into the corresponding **Hz** and **COM** terminal.
3. Insert the temperature probe to the corresponding input terminal of the multi-purpose socket.
4. Place the temperature probe to the object being measured. The measured value shows on the display after few seconds.

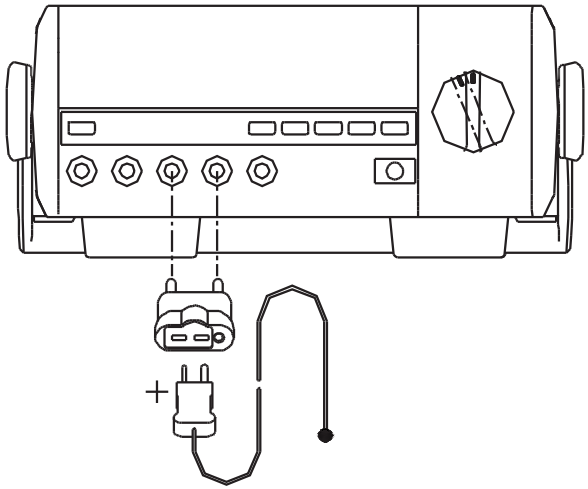

(Figure 10)

Note

- The testing environment must between 18^0C to 28^0C to ensure accuracy especially when measuring low temperature.
- Different reading may be obtained when testing room environment under short or open circuit situation, then short-circuited reading shall be considered as the correct reading.
- The included point contact temperature probe can only be used under 230^0C. For any measurement higher than that, the rod type temperature probe must be used instead.
- When temperature measurement has been completed, disconnect the connection between the temperature probe, multi-purpose socket and the circuit under test, and remove the temperature probe away from the input terminals of the multi-purpose socket, and remove the multi-purpose socket away from the input terminals of the Meter.

I. Measuring Transistor (see figure 11)

⚠ **Warning**

To avoid harms to you, please do not attempt to input voltages higher than 60V DC or 30V AC.

To measure transistor, connect the Meter as follows:

1. Insert the multi-purpose socket into the **μAmA** and **Hz** input terminal.
2. Set the rotary switch to **hFE**.
3. Insert the NPN or PNP type transistor to be tested into the corresponding input terminals of the multi-purpose socket.
4. The measured nearest transistor value shows on the display.

Note

l When transistor measeurement has been completed, remove the tested transistor from the multi-purpose socket and remove the multi-purpose scoket from the input terminal

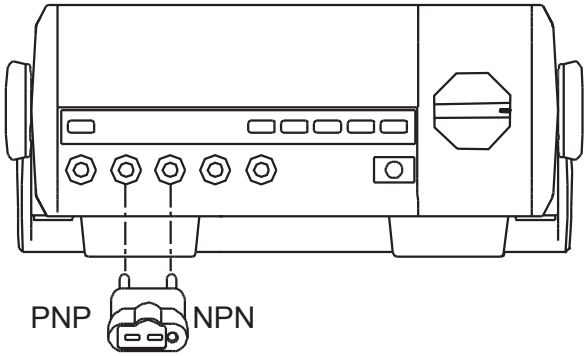

(Figure 11)

Operation of Hold Mode

⚠ **Warning**
To avoid possibility of electric shock, do not use Hold mode to determine if circuits are without power. The Hold mode will not capture unstable or noisy readings.

The Hold mode is applicable to all measurement functions.

- Press **HOLD** to enter Hold mode.
- Press **HOLD** again to exit Hold mode and the Meter displays the present measurement value.
- In Hold mode, **H** is displayed.

The POWER Button

This is a self-lock switch uses to turn on or off the power of the Meter. It is located at the tail of the Meter. "I" means power up the Meter while "O" means power off the Meter.

The SELECT Button

It uses for selecting the required measurement function when there is more than one function at one position of the rotary switch.

Turning on the Display Backlight

⚠ **Warning**

In order to avoid the hazard arising from mistaken readings in insufficient light or poor vision, please use Display Backlight function.

- Press **LIGHT** button to turn the Display Backlight on.
- Press **LIGHT** button again to turn the Display Backlight off, otherwise it will stay on continuously.
- When using the AC power to turn the Meter on, the Display Backlight always stays on.

The RANGE Button

- Press **RANGE** to enter the manual ranging mode; the Meter beeps.
- Press and hold **RANGE** for over 1 second to return to autoranging; the Meter beeps.

The MAX MIN Button

MAX MIN recording mode captures and stores the maximum and minimum input value detected.

To use the MAX MIN mode as follows:

- Press **MAX MIN** to display the highest reading (**MAX** is shown on display).
- Press **MAX MIN** again to display the lowest reading (**MIN** is shown on display).
  Press and hold **MAX MIN** for over 1 second to exit the MAX MIN mode.

AC/AC+DC Button

It is used to select measuring AC or AC+DC when measuring AC. Press it only at the AC voltage or current measuring mode which is at the rotary switch position **V≂**, **mV≂**, **μA≂**, **mA≂** or **A≂**. "**+DC** " will be displayed when it is pressed under DC measurement mode.

POWER INPUT Switch

It is used to select AC 220V/50Hz or DC 6pcs of 1.5V battery (R14) to power on the Meter. It is located at the tail of the Meter.

Sleep Mode

When the Meter display ☾ symbol, it automatically turns off if you do not turn the rotary switch or press any button for around 10 minutes to preserve battery. The last measurement value will be kept.

The Meter can be activated by pressing the **POWER** button off and then on or pressing the **HOLD** button, it will display the last measurement value before it entered sleep mode and under the HOLD mode.
Turning the rotary switch can also activate the Meter. However, it will start from the switch selected function and it will not display the last measurement value before it entered sleep mode.

To disable the Sleep Mode function, press **MAX MIN**, **RANGE**, or **RS232** button while turning on the Meter, the ☾ symbol disappears.

RS232 Button

Press **RS232** button to enter or exit data output mode. In RS232C serial port data output mode, the Hold and Max Min mode cannot output to the computer, the computer will only display the present measuring value. In RS232C serial port data output mode, Sleep Mode function will be disabled, ☾ symbol disappears. **+DC**, **hFE** and β cannot output to the computer.

General Specifications

- Maximum Voltage between any Terminals and Grounding:
  Refer to different range input protection voltage.
- ⚠Fused Protection for **HzΩmV** Input Terminal: 200mA, 250V, fast type, ϕ5x20mm (only apply on hFE functions)
- ⚠Fused Protection for **μAmA** Input Terminal: 500mA, 250V, fast type, ϕ5x20mm.
- ⚠Fused Protection for **10A** Input Terminal: 10A, 250V, fast type, ϕ5x20mm.
- ⚠Fused Protection for AC220V Terminal: 200mA, 250V, fast type, ϕ5x20mm.
  At AC220V power: without fuse protection.
- Maximum Display : Digital: 5999
- Measurement Speed: Updates 2-3 times/second.
- Range : Manual or auto ranging.
- Polarity Display : Auto
- Overloading Display : OL
- Temperature:
  Operating: 0^0C to +40^0C (32^0F to +104^0F).
  Storage : -10^0C to +50^0C (14^0F to +122^0F).
- Relative Humidity:
  ≤75% @ 0^0C - 30^0C below; ≤50% @ 30 - 40^0C.
- Altitude:
  Operating: 2000 m.
  Storage : 10000 m.
- Below 1V/m electrostatic discharge:
  Accuracy = specified accuracy + 5% of the range.
  Over 1V/m electrostatic discharge:Without specified accuracy.
- Power:
  AC200V-240V/50Hz or 6 pieces of 1.5V battery (R14).
- Battery Deficiency:
  Display
- Dimensions (HxWxL):
  105 x 240 x 310 mm.
- Weight:
  Approximate 2kg (accessories excluded).
- Safety/Compliances:
  IEC61010 CAT. I 1000V, CAT. II 600V overvoltage and double insulation standard.
- Certifications:
  CE, UL pending.

Accuracy Specifications

Accuracy: ±(a% reading + b digits),guarantee for 1 year.
Operating temperature: $23^0C \pm 5^0C$.
Relative humidity: not more than 75% RH.
Temperature coefficient: 0.1 x (specified accuracy)/1^0C.
None:
Under the influence of Radiated, Radio-Frequency Electromagnetic Field phenomenon, the captioned model may malfunction and can self-recover after the test.

A. DC Voltage

Range	Resolution	Accuracy	Overload Protection
600mV	0.1mV	±(0.6%+2)	1000V
6V	0.001V	±(0.3%+2)	
60V	0.01V		
600V	0.1V		
1000V	1V	±(0.5%+3)	

Remarks:

l **Input Impedance:**

At 600mV range : Around > 3000MΩ.

At all other ranges: Around 10MΩ.

B. AC Voltage

Range	Resolution	Accuracy	Overload Protection
600mV	0.1mV	40Hz-50kHz: ±(0.6%+5)	1000V
		>50kHZ-100kHz: ±(1%+5)	
6V	0.001V	40Hz-1kHz: ±(0.6%+5)	
		>1kHz-10kHz: ±(1.0%+5)	
		>10kHz-100kHz: ±(3%+5)	
60V	0.01V	40Hz-1kHz: ±(0.6%+5)	
		>1kHz-10kHz: ±(1.5%+5)	
		>10kHz-20kHz: ±(3%+5)	
		>20kHz-100kHz: ±(8%+5)	
600V	0.1V	40Hz-1kHz: ±(0.6%+5)	
		>1kHz-10kHz: ±(3.5%+5)	
1000V	1V	40Hz-1kHz: ±(1.2%+3)	
		>1kHz-3kHz: ±(3%+3)	

Remarks:

- **Input Impedance:**
  At 600mV range : Around > 3000MΩ
  At all other ranges: Around 10MΩ
- **Displays:**
  - True RMS (applicable to the range of 10%~95%)
  - At 1000V range: AC peak factor 1.5.
    All other ranges: AC peak factor 3.0.
  - Input short circuit has around less than 30 remaining digits, it will not affect accuracy.
  - AC+DC measurement accuracy = range's accuracy + 1%

C. DC Current

Range	Resolution	Accuracy	Overload Protection
600μA	0.1μA	±(0.5%+3)	Fuse 500mA, 250V, fast type, ϕ5x20mm.
6000μA	1μA		
60mA	0.01mA		
600mA	0.1mA	±(0.8%+3)	
10A	10mA	±(1.2%+3)	Fuse 10A, 250V, fast type, ϕ5x20mm.

Remarks:

- **At ≤ 5A range**: Continuous measurement is allowed.
- **At >5A range**: For continuous measurement ≤10 seconds and interval not less than 15 minutes.

D. AC Current

Range	Resolution	Accuracy	Overload Protection
600μA	0.1μA	40Hz~10kHz: ±(1.0%+5) >10kHz~15kHz: ±(2%+5)	Fuse 500mA, 250V, fast type,ϕ5x20mm.
6000μA	1μA		
60mA	0.01mA		
600mA	0.1mA	40Hz~10kHz: ±(1%+5) >10kHz~15kHz: ±(3%+5)	
10A	10mA	40Hz~5kHz: ±(2.0%+6)	Fuse 10A,250V, fast type, ϕ5x20mm.

Remarks:

- **At ≤ 5A range**: Continuous measurement is allowed.
- **At >5A range** : For continuous measurement ≤10 seconds and interval not less than 15 minutes.
- **Displays:**
  - True RMS (applicable to the range of 10%~95%)
  - AC peak factor 3.0.
  - Input short circuit has around less than 30 remaining digits, it will not affect accuracy.
  - AC+DC measurement accuracy = range's accuracy + 1%

E. Resistance

Range	Resolution	Accuracy	Overload Protection
600Ω	0.1Ω	±(0.8%+3) + test lead short circuit resistance value	250V rms
6kΩ	0.001kΩ	±(0.5%+2)	
60kΩ	0.01kΩ		
600kΩ	0.1kΩ		
6MΩ	0.001MΩ	±(0.8%+2)	
60MΩ	0.01MΩ	±(1.2%+3)	

F. Continuity Test

Range	Resolution	Overload Protection	Remarks
•))	1Ω	250V rms	l Open circuit voltage approximate -1.2V. l When circuit disconnected with resistance value > 30Ω, buzzer does not beep. l When circuit is in good connection with resistance value ≤ 10Ω buzzer beeps continuously.

G. Diode Testst

Range	Resolution	Overload Protection	Remarks
⊣◀	10mV	250V rms	l Open circuit voltage approximate 2.7V. l Working current approximate 1mA.

H. Capacitance

Range	Resolution	Accuracy	Overload Protection
6nF	0.001nF	±(2.5%+5)	250V rms
60nF	0.01nF		
600nF	0.1nF	±(2%+5)	
6μF	0.001μF		
60μF	0.01μF		
600μF	0.1μF	±(3%+4)	
6mF	0.001mF	±(5%+4)	

Remarks:

1 At 6nF, 60nF and 600nF Range: reading must subtract the test lead open circuit capacitance value.

I. Frequency

Range	Resolution	Accuracy	Overload Protection
6kHz	0.001kHz	±(0.1%+3)	250V rms
60kHz	0.01kHz		
600kHz	0.1kHz		
6MHz	0.001MHz		
60MHz	0.01MHz		

Remarks:

l **Input scope (a)**: (DC electric level is zero)
When 10Hz ~ 1MHz : 150mV ≤ a ≤ 30V rms
When > 1MHz ~ 10MHz : 300mV ≤ a ≤ 30V rms
When > 10MHz ~ 50MHz : 600mV ≤ a ≤ 30V rms
When > 50MHz : Unspecified

J. Temperature

Range	Resolution	Accuracy		Overload Protection
^{0}C	1^{0}C	-40^{0}C~0^{0}C	±(8%+5)	250V rms
		>0^{0}C~400^{0}C	±(1%+3)	
		>400^{0}C~1000^{0}C	±(1.5%+3)	
^{0}F	1^{0}F	-40^{0}F~32^{0}F	±(8%+5)	
		>32^{0}F~752^{0}F	±(1.5%+5)	
		>752^{0}F~1832^{0}F	±(2.5%+5)	

Remarks:

l The included point contact temperature probe can only be used to measure under 230^{0}C temperature. For any measurement higher than that, the rod type temperature probe must be used instead.

K. Transistor

Range	Resolution	Overload Protection	Remarks
hFE	1β	l Fuse 200mA, 250V, fast type, ϕ5x20mm. l Fuse 500mA, 250V, fast type, ϕ5x20mm	Vce ≈ 2.2V bo ≈ 10μA 1000β MAX

Maintenance

This section provides basic maintenance information including battery and fuse replacement instruction.

⚠ Warning

Do not attempt to repair or service your Meter unless you are qualified to do so and have the relevant calibration, performance test, and service information. To avoid electrical shock or damage to the Meter, do you get water inside the case.

A. General Service

- Periodically wipe the case with a damp cloth and mild detergent. Do not use abrasives or solvents.
- To clean the terminals with cotton bar with detergent, as dirt or moisture in the terminals can affect readings.
- Turn off the power of the Meter when it is not in use.
- Take out the battery when it is using for a long time.
- Do not use or store the Meter in a place of humidity, high temperature, explosive, inflammable and strong magnetic field.

B. Replacing the Fuses (see figure 12)

⚠ **Warning**

To avoid electrical shock or arc blast, or personal injury or damage to the Meter, use specified fuses ONLY in accordance with the following procedure.

To replace the Meter's fuse:

1. Press the **POWER** to turn the Meter off, disconnect the power cord and remove all connections from the terminals.
2. Fuse 1: Remove the screws from the power socket at the rear of the Meter. Remove the fuse by gently prying one end loose, then take out the fuse from its bracket. Then install the replacement fuse.
   Fuse 2 and 3: Use a coin to open the accessories compartment at the top of the front cover, then you will see a fuse compartment. Open the fuse compartment to replace fuse 2 and 3. Remove the fuse by gently prying one end loose, then take out the fuse from its bracket.
   Then install the replacement fuse.

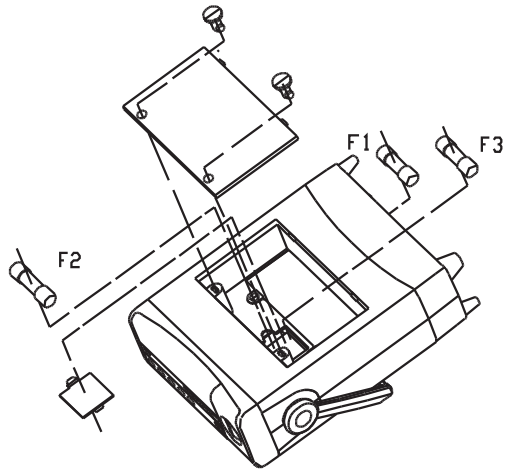

(Figure 12)

Fuse 4:It is located at the PCB. Remove the fuse by gently prying one end loose, then take out the fuse from its bracket. Then install the replacement fuse

3. Install ONLY replacement fuses with the identical type and specification as follows and make sure the fuse is fixed firmly in the bracket.
   Fuse 1: F200mA, 250V, ϕ5x20 mm (AC220V)
   Fuse 2: F10A, 250V, ϕ5x20 mm (A)
   Fuse 3: F500mA, 250V,ϕ5x20 mm (μA, mA)
   Fuse 4: F200mA, 250V,ϕ5x20 mm (hFE)

Replacement of the fuses is seldom required. Burning of a fuse always results from improper operation.

C. Replacing the Battery (see figure 13)

⚠ **Warning**

To avoid false readings, which could lead to possible electric shock or personal injury, replace the battery as soon as the battery indicator " " appears when using battery to power on the Meter.

To replace the battery:

1. Press the **POWER** to turn the Meter off and remove all connections from the terminals.
2. Use a coin to open the accessories compartment at the top of the front case.
3. Use a coin to open the battery compartment inside the accessories compartment located at the top of he front case.
4. Remove all the batteries from the battery compartment.
5. Replace the battery with new 6pcs of 1.5V battery (R14).
6. Rejoin the battery compartment and also the accessories compartment located at the top of the front case.

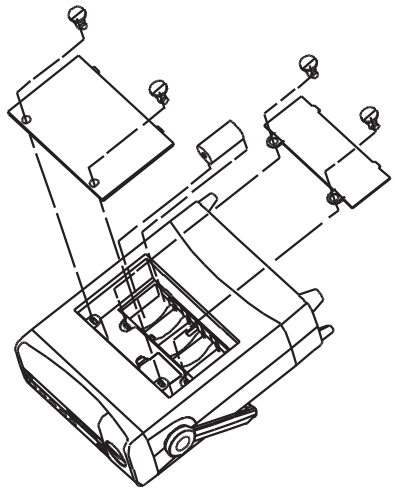

(Figure 13)

RS232C and USB Serial Port

System Requirements for Installing the UT803 Interface Program

To use UT803 Interface Program, you need the following hardware and software:

- An IBM PC or equivalent computer with 80486 or higher processor and 600 x 800 pixel or better monitor.
- Microsoft Windows 95 or above.
- At least 8MB of RAM.
- At least 8MB free space in hard drive.
- Can access to a local or a network CD-ROM.
- A free serial port.
- A mouse or other pointing device supported by Windows.

RS232C Serial Port

A. Connecting between the Meter and computer (see figure 14)

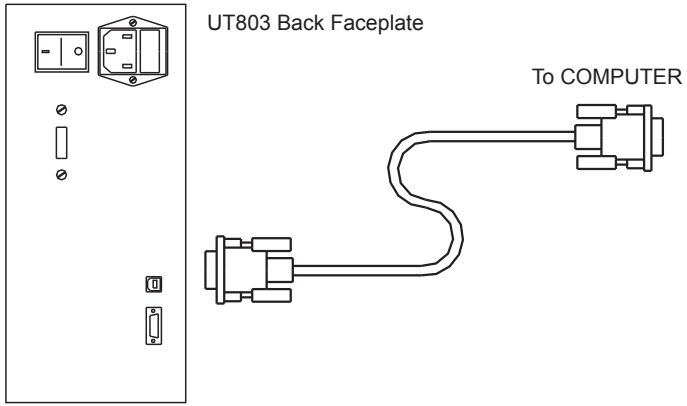

(Figure 14)

B. RS232C Port Cable

The Meter		Computer	
D-sub 9 Pin Male		D-sub 9 Pin Female	D-sub 25 Pin Female
1 (DCD)	——	1 (DCD)	8 (DCD)
2 (RXD)	——	3 (TXD)	2 (TXD)
3 (TXD)	——	2 (RXD)	3 (RXD)
4 (DTR)	——	4 (DTR)	20 (DTR)
5 (SG)	——	5 (SG)	7 (SG)
6 (DSR)	——	6 (DSR)	6 (DSR)
7 (RTS)	——	7 (RTS)	4 (RTS)
8 (CTS)	——	8 (CTS)	5 (CTS)
9 (RI)	——	9 (RI)	22 (RI)

C. Setting of RS232C Serial Ports

Default of RS232C serial port for communication is set as:

Baud Rate	19200
Start bit	1
Stop bit	1
Data bits	7
Parity Odd	

USB Serial Port

A. Connecting between the Meter and computer (see figure 15)

B. Setting of USB Serial Ports

Install the USB serial port driver according to the **Installation Guide & Computer Interface Software** before connecting the Meter and computer.

Check for the USB Serial port shown at the Control Panel => System => Device Manager. Make sure connect the Meter and the computer with the same port.

Please refer to the included **"Installation Guide & Computer Interface Software"** for installing and operating instructions of the **UT803 Interface Program..**

The Meter is to be supplied from an identical USB port complying with the requirement of Limit Power Source.

END

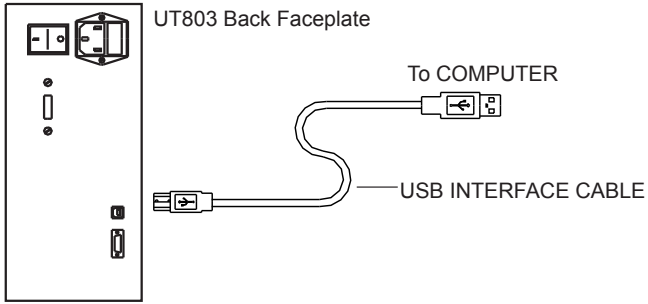

(Figure 15)

UNI-T®
UNI-TREND TECHNOLOGY（CHINA）CO., LTD.
No6, Gong Ye Bei 1st Road,
Songshan Lake National High-Tech Industrial
Development Zone, Dongguan City,
Guangdong Province, China
Tel: (86-769) 8572 3888
http://www.uni-trend.com